DESIGN INFORMATION

Project: Spokane Residence ***Block Manufacturer:*** Wilbert Precast ***Engineer:*** John McKervey, P.E. of JM Engineering ***Contractor:*** Ben Jeffers ***Location:*** Spokane, Washington ***Completed:*** 2014

RETAINING BLOCKS

Infill Weight Calculations

R-28M 28" (710 mm) MIDDLE BLOCK WITH SOIL INFILL

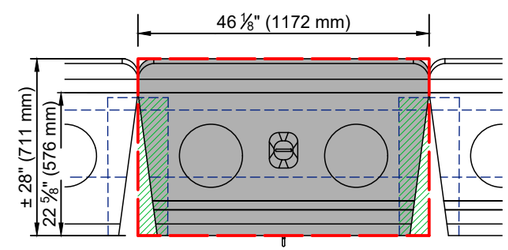

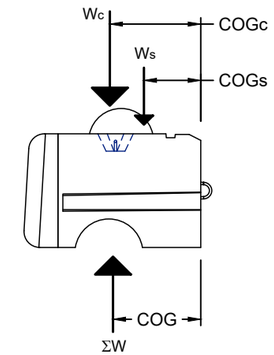

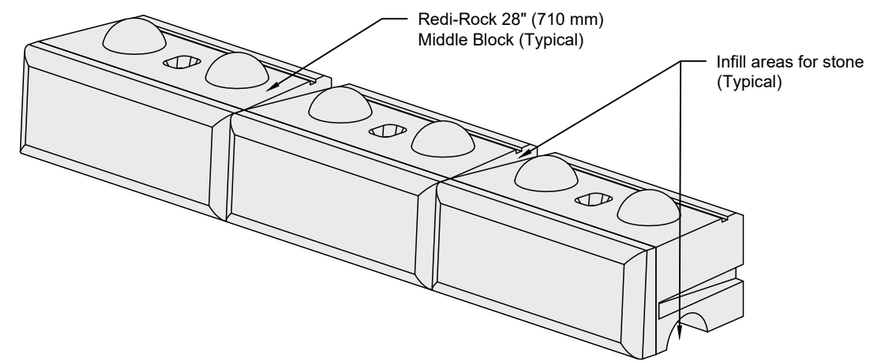

INFILLED UNIT WEIGHT CALCULATIONS

CONCRETE

Design Unit Weight = 143 pcf (2291 kg/m^3)

LIMESTONE AND COBBLESTONE FACE TEXTURE

Average Volume (Vc)	11.28 cft (0.32 m^3) (From CAD Model)
Concrete Block Weight (Wc)	Wc = 11.28 cft x 143 pcf = 1,613 lbs (732 kg)

KINGSTONE AND LEDGESTONE FACE TEXTURE

Average Volume (Vc)	10.78 cft (0.31 m^3) (From CAD Model)
Concrete Block Weight (Wc)	Wc = 10.78 cft x 143 pcf = 1,542 lbs (699 kg)
Average Center of Gravity (COGc)	13.9 in (353 mm) (From CAD Model)

INFILL SOIL

Design Unit Weight = 100 pcf (1602 kg/m^3)

Soil considered as infill includes the soil between adjacent blocks and at the ends of the bottom groove in the block.

Volume (Vs)	1.05 cft (0.03 m^3) (From CAD Model)
Infill Soil Weight (Ws)	Ws = 1.05 cft x 100 pcf = 105 lbs (47.7 kg)
Center of Gravity (COGs)	13.6 in (345 mm) (Data from CAD Model)

DESIGN VOLUME

28 in x 46.125 in x 18 in = 13.45 cft

(0.711 m x 1.172 m x 0.457 m = 0.38m^3)

INFILLED UNIT WEIGHT

LIMESTONE AND COBBLESTONE FACE TEXTURE

γ_{INFILL} = (1,613 lb + 105 lb) / 13.45 cft = **127.7 pcf**

((733 kg + 48 kg) / 0.381 m^3 = 2045 kg/m^3)

KINGSTONE AND LEDGESTONE FACE TEXTURE

γ_{INFILL} = (1,542 lb + 105 lb) / 13.45 cft = **122.4 pcf**

((701 kg + 48 kg) / 0.381 m^3 =1960 kg/m^3)

NOTE: The infilled unit weights shown here are reference values. Several factors can cause the unit weights of both concrete and infill soil to vary. The designer should use sound engineering judgement when assigning an infilled unit weight value for analysis.

RETAINING BLOCKS

Infill Weight Calculations

R-28PCM 28" (710 mm) POSITIVE CONNECTION (PC) MIDDLE BLOCK WITH SOIL INFILL

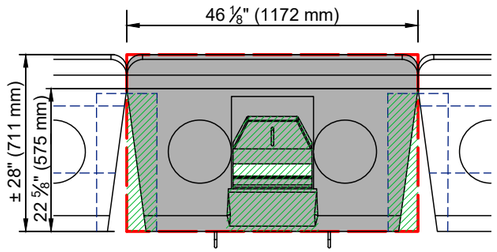

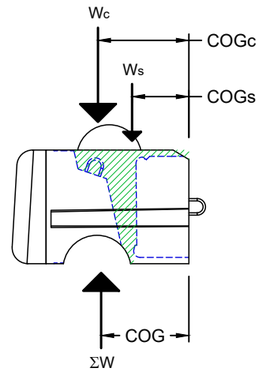

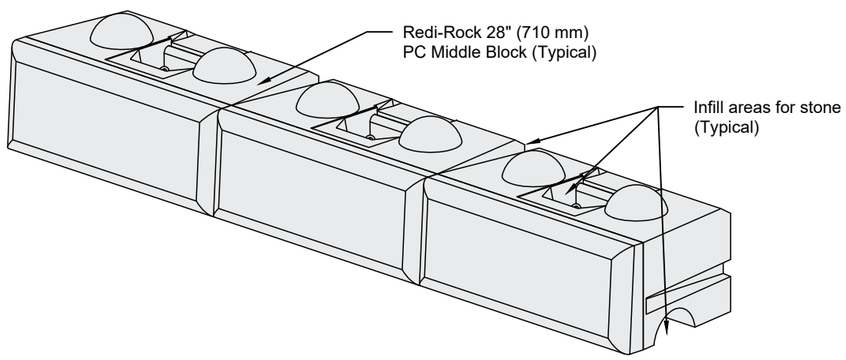

INFILLED UNIT WEIGHT CALCULATIONS

CONCRETE

Design Unit Weight = 143 pcf (2291 kg/m^3)

LIMESTONE AND COBBLESTONE FACE TEXTURE

Average Volume (Vc)	10.62 cft (0.30 m^3) (From CAD Model)
Concrete Block Weight (Wc)	Wc = 10.62 cft x 143 pcf = 1,519 lbs (690 kg)

KINGSTONE AND LEDGESTONE FACE TEXTURE

Average Volume (Vc)	10.12 cft (0.29 m^3) (From CAD Model)
Concrete Block Weight (Wc)	Wc = 10.12 cft x 143 pcf = 1,447 lbs (658 kg)
Average Center of Gravity (COGc)	14.0 in (356 mm) (From CAD Model)

INFILL SOIL

Design Unit Weight = 100 pcf (1602 kg/m^3)

Soil considered as infill includes the soil between adjacent blocks, in the geogrid slot, and at the ends of the bottom groove in the block.

Volume (Vs)	1.73 cft (0.05 m^3) (From CAD Model)
Infill Soil Weight (Ws)	Ws = 1.73 cft x 100 pcf = 173 lbs (79 kg)
Center of Gravity (COGs)	9.9 in (251 mm) (Data from CAD Model)

DESIGN VOLUME

28 in x 46.125 in x 18 in = 23,247 in^3 = 13.45 cft
(0.711 m x 1.172 m x 0.457 m = 0.38m^3)

INFILLED UNIT WEIGHT

LIMESTONE AND COBBLESTONE FACE TEXTURE
γ_{INFILL} = (1,519 lb + 173 lb) / 13.45 cft = **125.8 pcf**
((690 kg + 79 kg) / 0.381 m^3 = 2015 kg/m^3)

KINGSTONE AND LEDGESTONE FACE TEXTURE
γ_{INFILL} = (1,447 lb + 173 lb) / 13.45 cft = **120.4 pcf**
((658 kg + 79 kg) / 0.381 m^3 = 1629 kg/m^3)

NOTE: The infilled unit weights shown here are reference values. Several factors can cause the unit weights of both concrete and infill soil to vary. The designer should use sound engineering judgement when assigning an infilled unit weight value for analysis.

RETAINING BLOCKS

Infill Weight Calculations

R-41M 41" (1030 mm) MIDDLE BLOCK WITH SOIL INFILL

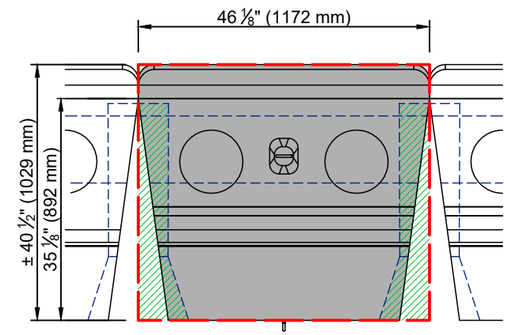

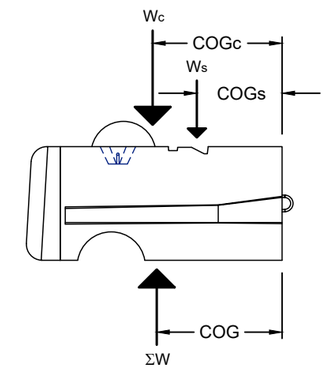

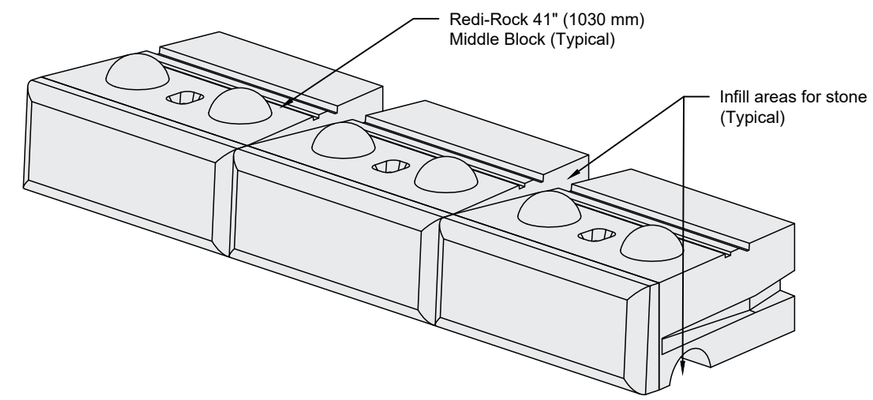

INFILLED UNIT WEIGHT CALCULATIONS

CONCRETE

Design Unit Weight = 143 pcf (2291 kg/m^3)

LIMESTONE AND COBBLESTONE FACE TEXTURE

Average Volume (Vc)	16.14 cft (0.457 m^3) (From CAD Model)
Concrete Block Weight (Wc)	Wc = 16.14 cft x 143 pcf = 2,308 lbs (1048 kg)

KINGSTONE AND LEDGESTONE FACE TEXTURE

Average Volume (Vc)	15.65 cft (0.443 m^3) (From CAD Model)
Concrete Block Weight (Wc)	Wc = 15.65 cft x 143 pcf = 2,238 lbs (1015 kg)
Average Center of Gravity (COGc)	20.5 in (521 mm) (From CAD Model)

INFILL SOIL

Design Unit Weight = 100 pcf (1602 kg/m^3)

Soil considered as infill includes the soil between adjacent blocks and at the ends of the bottom groove in the block.

Volume (Vs)	2.18 cft (0.062 m^3) (From CAD Model)
Infill Soil Weight (Ws)	Ws = 2.18 cft x 100 pcf = 218 lbs (99.1 kg)
Center of Gravity (COGs)	13.5 in (342 mm) (Data from CAD Model)

DESIGN VOLUME

40.5 in x 46.125 in x 18 in = 19.46 cft
(1.03 m x 1.172 m x 0.457 m = 0.55 m^3)

INFILLED UNIT WEIGHT

LIMESTONE AND COBBLESTONE FACE TEXTURE
γ_{INFILL} = (2,308 lb + 218 lb) / 19.46 cft = **129.8 pcf**
((1049 kg + 99 kg) / 0.551 m^3 = 2079 kg/m^3)

KINGSTONE AND LEDGESTONE FACE TEXTURE
γ_{INFILL} = (2,238 lb + 218 lb) / 19.46 cft = **126.2 pcf**
((1017 kg + 99 kg) / 0.551 m^3 =2021 kg/m^3)

NOTE: The infilled unit weights shown here are reference values. Several factors can cause the unit weights of both concrete and infill soil to vary. The designer should use sound engineering judgement when assigning an infilled unit weight value for analysis.

RETAINING BLOCKS

Infill Weight Calculations

R-41PCM 41" (1030 mm) POSITIVE CONNECTION (PC) MIDDLE BLOCK WITH SOIL INFILL

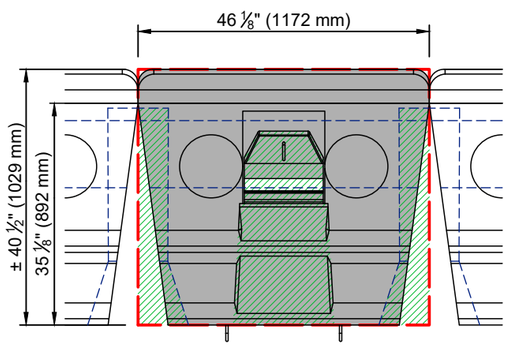

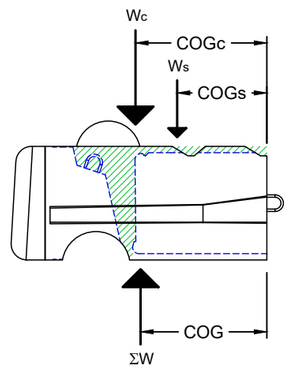

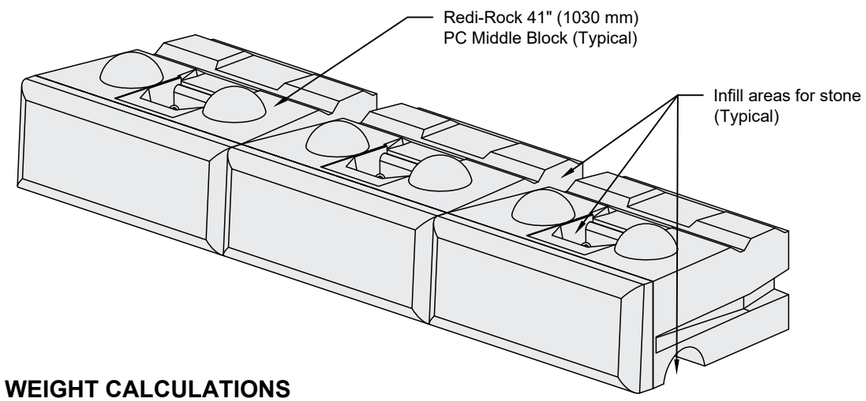

INFILLED UNIT WEIGHT CALCULATIONS

CONCRETE

Design Unit Weight = 143 pcf (2291 kg/m^3)

LIMESTONE AND COBBLESTONE FACE TEXTURE

Average Volume (Vc)	15.19 cft (0.43 m^3) (From CAD Model)
Concrete Block Weight (Wc)	Wc = 15.19 cft x 143 pcf = 2,172 lbs (987 kg)

KINGSTONE AND LEDGESTONE FACE TEXTURE

Average Volume (Vc)	14.69 cft (0.42 m^3) (From CAD Model)
Concrete Block Weight (Wc)	Wc = 14.69 cft x 143 pcf = 2,101 lbs (955 kg)
Average Center of Gravity (COGc)	20.4 in (518 mm) (From CAD Model)

INFILL SOIL

Design Unit Weight = 100 pcf (1602 kg/m^3)

Soil considered as infill includes the soil between adjacent blocks, in the geogrid slot, and at the ends of the bottom groove in the block.

Volume (Vs)	2.92 cft (0.08 m^3) (From CAD Model)
Infill Soil Weight (Ws)	Ws = 2.92 cft x 100 pcf = 292 lbs (133 kg)
Center of Gravity (COGs)	15.6 in (396 mm) (Data from CAD Model)

DESIGN VOLUME

40.5 in x 46.125 in x 18 in = 33,625 in^3 = 19.46 cft
(1.03 m x 1.172 m x 0.457 m = 0.55 m^3)

INFILLED UNIT WEIGHT

LIMESTONE AND COBBLESTONE FACE TEXTURE
γ_{INFILL} = (2,172 lb + 292 lb) / 19.46 cft = **126.6 pcf**
((987 kg x 133 kg) / 0.551 m^3 = 2030 kg/m^3)

KINGSTONE AND LEDGESTONE FACE TEXTURE
γ_{INFILL} = (2,101 lb + 292 lb) / 19.46 cft = **123.0 pcf**
((955 kg x 133 kg) / 0.551 m^3 = 1970 kg/m^3)

NOTE: The infilled unit weights shown here are reference values. Several factors can cause the unit weights of both concrete and infill soil to vary. The designer should use sound engineering judgement when assigning an infilled unit weight value for analysis.

RETAINING BLOCKS

Infill Weight Calculations

R-60M 60" (1520 mm) MIDDLE BLOCK WITH SOIL INFILL

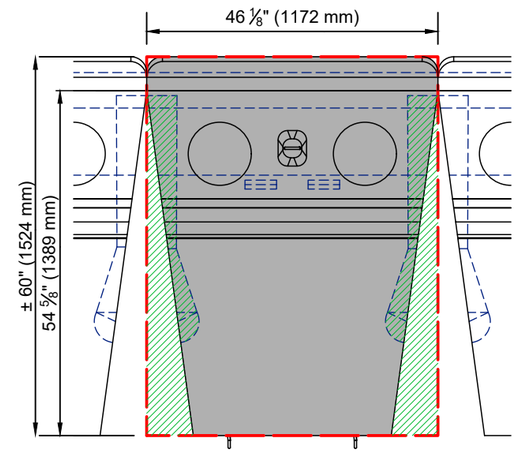

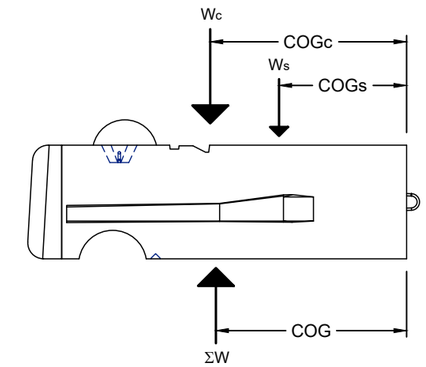

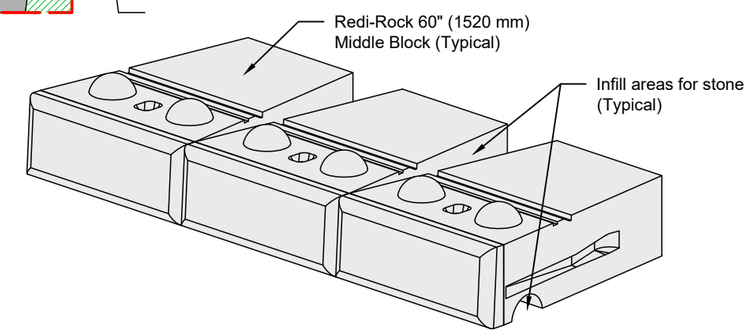

INFILLED UNIT WEIGHT CALCULATIONS

CONCRETE

Design Unit Weight = 143 pcf (2291 kg/m^3)

LIMESTONE AND COBBLESTONE FACE TEXTURE

Average Volume (Vc)	23.00 cft (0.651m^3) (From CAD Model)
Concrete Block Weight (Wc)	Wc = 23.0 cft x 143 pcf = 3,287 lbs (1491 kg)

KINGSTONE AND LEDGESTONE FACE TEXTURE

Average Volume (Vc)	22.49 cft (0.637 m^3) (From CAD Model)
Concrete Block Weight (Wc)	Wc = 22.49 cft x 143 pcf = 3,216 lbs (1458 kg)
Average Center of Gravity (COGc)	31.1 in (790 mm) (From CAD Model)

INFILL SOIL

Design Unit Weight = 100 pcf (1602 kg/m^3)

Soil considered as infill includes the soil between adjacent blocks and at the ends of the bottom groove in the block.

Volume (Vs)	4.70 cft (0.133 m^3) (From CAD Model)
Infill Soil Weight (Ws)	Ws = 4.70 cft x 100 pcf = 470 lbs (214 kg)
Center of Gravity (COGs)	20.2 in (513mm) (Data from CAD Model)

DESIGN VOLUME

60 in x 46.125 in x 18 in = 28.83 cft
(1.524 m x 1.172 m x 0.457 m = 0.816 m^3)

INFILLED UNIT WEIGHT

LIMESTONE AND COBBLESTONE FACE TEXTURE
γ_{INFILL} = (3,288 lb + 470 lb) / 28.83 cft = **130.4 pcf**
((1495 kg + 214 kg) / 0.816 m^3 = 2089 kg/m^3)

KINGSTONE AND LEDGESTONE FACE TEXTURE
γ_{INFILL} = (3,216 lb + 470 lb) / 28.83 cft = **127.9 pcf**
((1462 kg + 214 kg) / 0.816 m^3 = 2050 kg/m^3)

NOTE: The infilled unit weights shown here are reference values. Several factors can cause the unit weights of both concrete and infill soil to vary. The designer should use sound engineering judgement when assigning an infilled unit weight value for analysis.

RETAINING BLOCKS

Infill Weight Calculations

R-60B 60" (1520 MM) BOTTOM BLOCK WITH SOIL INFILL

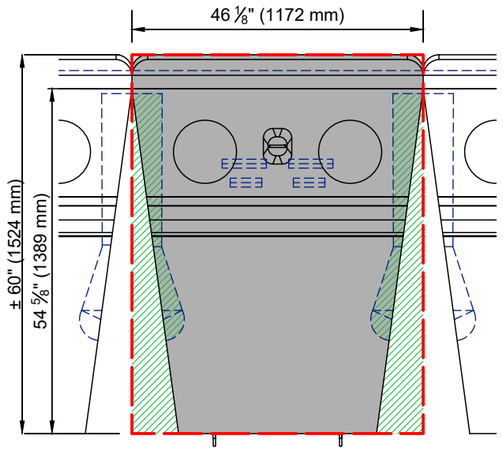

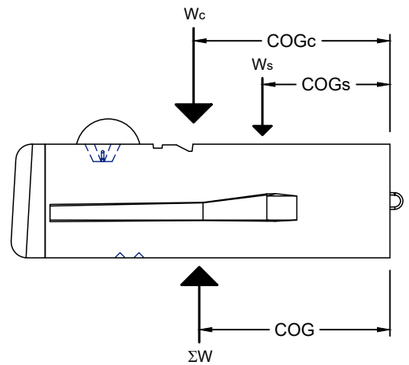

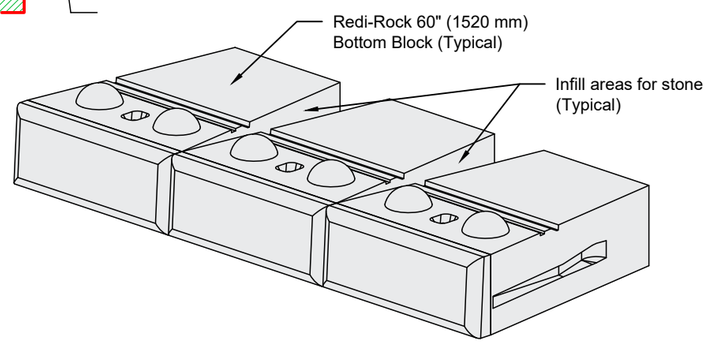

INFILLED UNIT WEIGHT CALCULATIONS

CONCRETE

Design Unit Weight = 143 pcf (2291 kg/m^3)

LIMESTONE AND COBBLESTONE FACE TEXTURE

Average Volume (Vc)	23.90 cft (0.677 m^3) (From CAD Model)
Concrete Block Weight (Wc)	Wc = 23.90 cft x 143 pcf = 3,418 lbs

KINGSTONE AND LEDGESTONE FACE TEXTURE

Average Volume (Vc)	23.40 cft (From CAD Model)
Concrete Block Weight (Wc)	Wc = 23.40 cft x 143 pcf = 3,346 lbs
Average Center of Gravity (COGc)	31.6 in from Back of Block (From CAD Model)

INFILL SOIL

Design Unit Weight = 100 pcf (1602 kg/m^3)

Soil considered as infill includes the soil between adjacent blocks and at the ends of the bottom groove in the block.

Volume (Vs)	4.58 cft (From CAD Model)
Infill Soil Weight (Ws)	Ws = 4.58 cft x 100 pcf = 458 lbs
Center of Gravity (COGs)	19.5 in from Back of Block (Data from CAD Model)

DESIGN VOLUME

60 in x 46.125 in x 18 in = 49,815 in^3 = 28.83 cft
(1.524 m x 1.172 m x 0.457 m = 0.816 m^3)

INFILLED UNIT WEIGHT

LIMESTONE AND COBBLESTONE FACE TEXTURE
γ_{INFILL} = (3,418 lb + 458 lb) / 28.83 cft = **134.4 pcf**
((1554 kg + 208 kg) / 0.816 m^3 = 2153 kg/m^3)

KINGSTONE AND LEDGESTONE FACE TEXTURE
γ_{INFILL} = (3,346 lb + 458 lb) / 28.83 cft = **131.9 pcf**
((1521 kg + 208 kg) / 0.816 m^3 =2113 kg/m^3)

NOTE: The infilled unit weights shown here are reference values. Several factors can cause the unit weights of both concrete and infill soil to vary. The designer should use sound engineering judgement when assigning an infilled unit weight value for analysis.

Infill Weight Calculations

R-5236HC 52" (1,320 mm) XL HOLLOW-CORE RETAINING BLOCK WITH SOIL INFILL

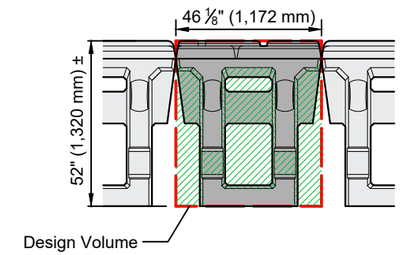

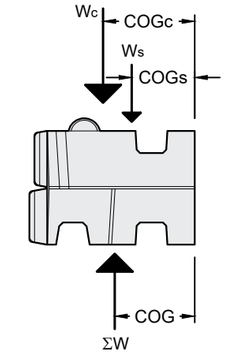

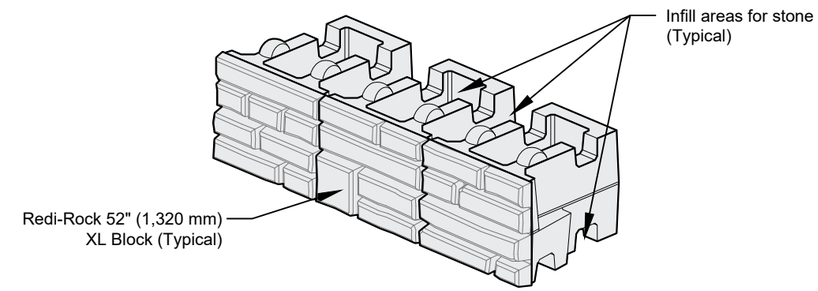

INFILLED UNIT WEIGHT CALCULATIONS

CONCRETE

Design Unit Weight = 143 pcf (2,291 kg/m^3)

LEDGESTONE FACE TEXTURE

Average Volume (Vc)	23.29 cft (0.66 m^3) (From CAD Model)
Concrete Block Weight (Wc)	23.29 cft x 143 pcf = 3,331 lbs (1,511 kg)
Average Center of Gravity (COGc)	29.0 in (737 mm) (From CAD Model)

INFILL

Design Unit Weight = 100 pcf (1,602 kg/m^3)

Material considered as infill includes the crushed stone between adjacent blocks and in the hollow cores within the blocks.

Volume (Vs)	22.88 cft (0.65 m^3) (From CAD Model)
Infill Soil Weight (Ws)	22.88 cft x 100 pcf = 2,288 lbs (1,038 kg)
Center of Gravity (COGs)	20.0 in (507 mm) (From CAD Model)

DESIGN VOLUME & CENTER OF GRAVITY

52 in x 46.125 in x 36 in = 49.97 cft
(1.321 m x 1.172 m x 0.914 m = 1.415 m^3)
COG = (29.0 in (3,331 lbs) + 20.0 in (2,288 lbs))/(3,331 lbs + 2,288 lbs) = 25.34 in (644 mm)

INFILLED UNIT WEIGHT

LEDGESTONE FACE TEXTURE
γ_{INFILL} = (3,331 lb + 2,288 lb) / 49.97 cft = **112.4 pcf**
((1,511 kg + 1,038 kg) / 1.415 m^3 = 1,801 kg/m^3)

NOTE: The infilled unit weights shown here are reference values. Several factors can cause the unit weights of both concrete and infill soil to vary. The designer should use sound engineering judgement when assigning an infilled unit weight value for analysis. For overturning analyses, AASHTO recommends limiting the infill soil weight to 80% of its theoretical maximum for units without a solid bottom (11.11.4.4).

Infill Weight Calculations

R-7236HC 72" (1,830 mm) XL HOLLOW-CORE RETAINING BLOCK WITH SOIL INFILL

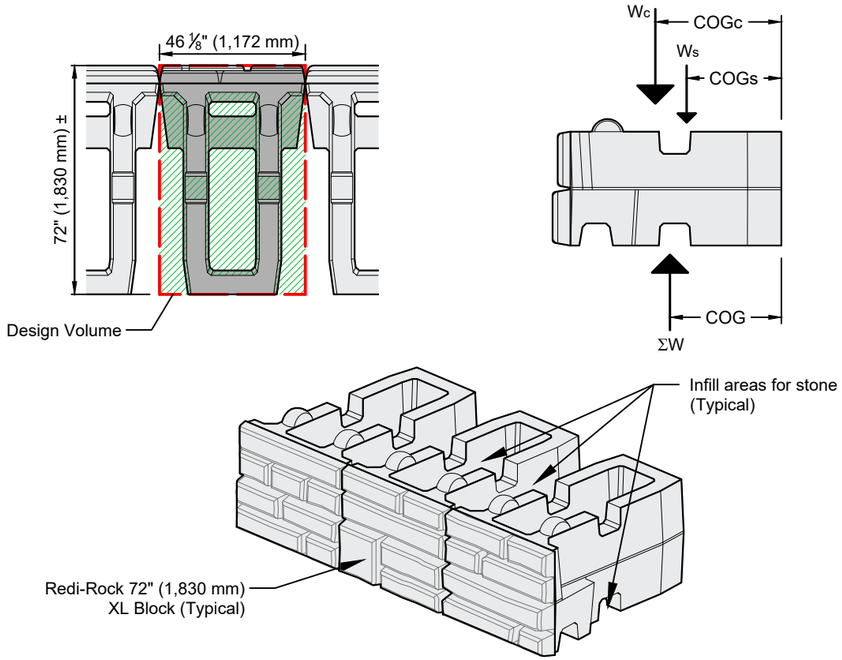

INFILLED UNIT WEIGHT CALCULATIONS

CONCRETE

Design Unit Weight = 143 pcf (2,291 kg/m^3)

LEDGESTONE FACE TEXTURE

Average Volume (Vc)	29.10 cft (0.82 m^3) (From CAD Model)
Concrete Block Weight (Wc)	29.10 cft x 143 pcf = 4,162 lbs (1,888 kg)
Average Center of Gravity (COGc)	39.9 in (1,013 mm) (From CAD Model)

INFILL

Design Unit Weight = 100 pcf (1,602 kg/m^3)

Material considered as infill includes the crushed stone between adjacent blocks and in the hollow cores within the blocks.

Volume (Vs)	36.29 cft (1.03 m^3) (From CAD Model)
Infill Soil Weight (Ws)	36.29 cft x 100 pcf = 3,629 lbs (1,646 kg)
Center of Gravity (COGs)	30.0 in (762 mm) (From CAD Model)

DESIGN VOLUME & CENTER OF GRAVITY

72 in x 46.125 in x 36 in = 69.19 cft

(1.829 m x 1.172 m x 0.914 m = 1.959 m^3)

COG = (39.9 in (4,162 lbs) + 30.0 in (3,629 lbs))/(4,162 lbs + 3,629 lbs) = 35.26 in (896 mm)

INFILLED UNIT WEIGHT

LEDGESTONE FACE TEXTURE

γ_{INFILL} = (4,162 lb + 3,629 lb) / 69.19 cft = **112.6 pcf**

((1,888 kg + 1,646 kg) / 1.959 m^3 = 1,804 kg/m^3)

NOTE: The infilled unit weights shown here are reference values. Several factors can cause the unit weights of both concrete and infill soil to vary. The designer should use sound engineering judgement when assigning an infilled unit weight value for analysis. For overturning analyses, AASHTO recommends limiting the infill soil weight to 80% of its theoretical maximum for units without a solid bottom (11.11.4.4).

Infill Weight Calculations

R-9636HC 96" (2,440 mm) XL HOLLOW-CORE RETAINING BLOCK WITH SOIL INFILL

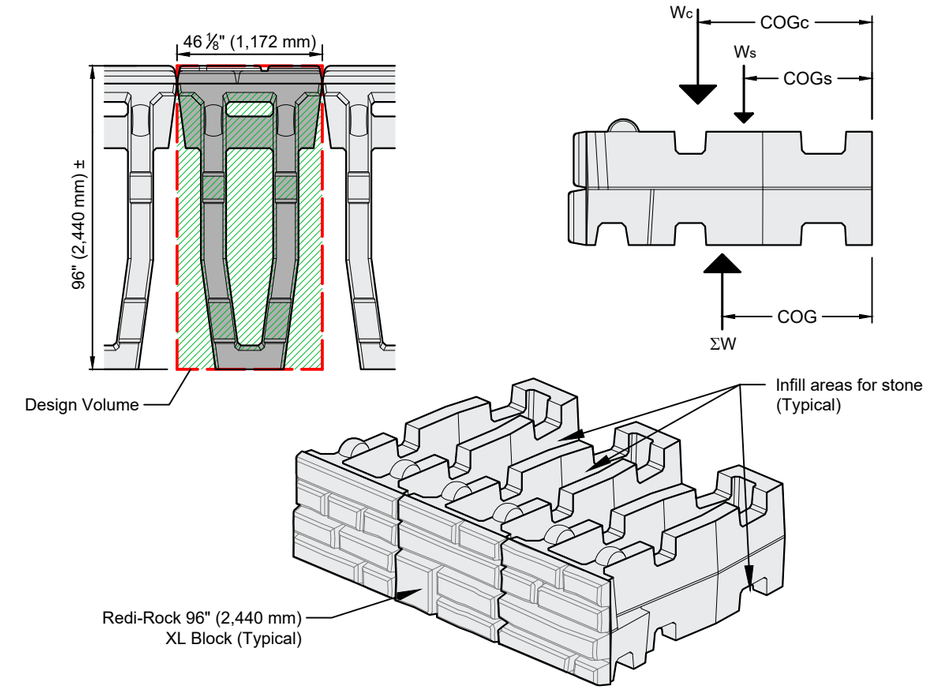

INFILLED UNIT WEIGHT CALCULATIONS

CONCRETE

Design Unit Weight = 143 pcf (2,291 kg/m^3)

LEDGESTONE FACE TEXTURE

Average Volume (Vc)	33.83 cft (0.96 m^3) (From CAD Model)
Concrete Block Weight (Wc)	33.83 cft x 143 pcf = 4,837 lbs (2,194 kg)
Average Center of Gravity (COGc)	55.3 in (1,405 mm) (From CAD Model)

INFILL

Design Unit Weight = 100 pcf (1,602 kg/m^3)

Material considered as infill includes the crushed stone between adjacent blocks and in the hollow cores within the blocks.

Volume (Vs)	54.63 cft (1.55 m^3) (From CAD Model)
Infill Soil Weight (Ws)	54.63 cft x 100 pcf = 5,463 lbs (2,478 kg)
Center of Gravity (COGs)	40.7 in (1,034 mm) (From CAD Model)

DESIGN VOLUME

96 in x 46.125 in x 36 in = 92.25 cft

(2.438 m x 1.172 m x 0.914 m = 2.612 m^3)

COG = (55.3 in (4,837 lbs) + 40.7 in (5,463 lbs)) / (4,837 lbs + 5,463 lbs) = 47.57 in (1,208 mm)

INFILLED UNIT WEIGHT

LEDGESTONE FACE TEXTURE

γ_{INFILL} = (4,837 lb + 5,463 lb) / 92.25 cft = **111.7 pcf**

((2,194 kg + 2,478 kg) / 2.612 m^3 = 1,789 kg/m^3)

NOTE: The infilled unit weights shown here are reference values. Several factors can cause the unit weights of both concrete and infill soil to vary. The designer should use sound engineering judgement when assigning an infilled unit weight value for analysis. For overturning analyses, AASHTO recommends limiting the infill soil weight to 80% of its theoretical maximum for units without a solid bottom (11.11.4.4).

Block Setback Options

The block-to-block setback available with Redi-Rock is controlled by the size and location of the shear knobs (domes) cast into the blocks. While the 10" (254 mm) diameter knob and the 1 5/8" (41 mm) setback position is the most common configuration, Redi-Rock has three different knob sizes and three different locations available.

Five degree (5°) setback
(Standard)

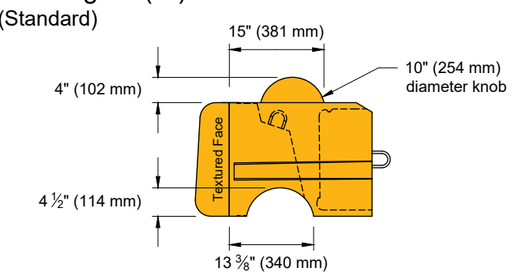

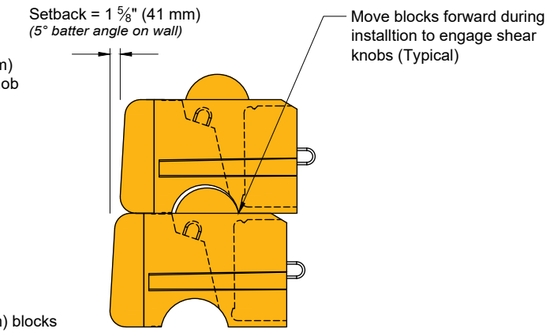

Available with:
- 28" (710 mm) blocks, 41" (1030 mm) blocks, and 60" (1520 mm) blocks
- 28" (710 mm) PC blocks (shown here) and 41" (1030 mm) PC blocks

One degree (1°) setback
(Specialty)

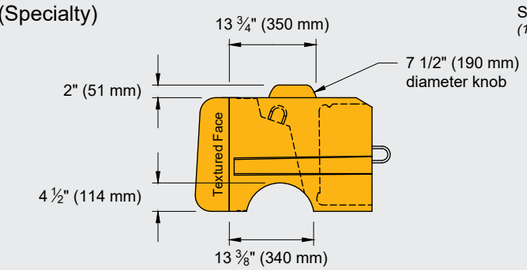

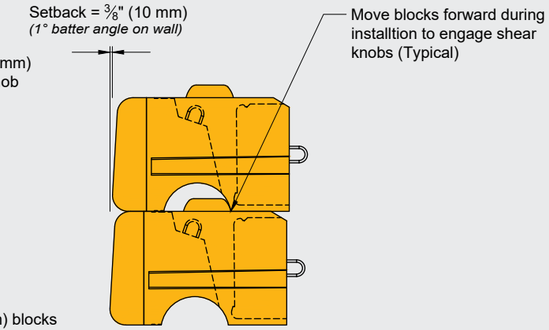

Available with:
- 28" (710 mm) blocks, 41" (1030 mm) blocks, and 60" (1520 mm) blocks
- 28" (710 mm) PC blocks (shown here) and 41" (1030 mm) PC blocks

Zero (0°) setback
(Specialty)

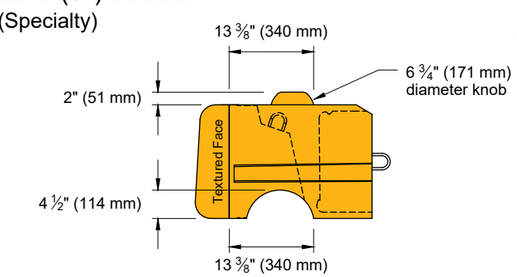

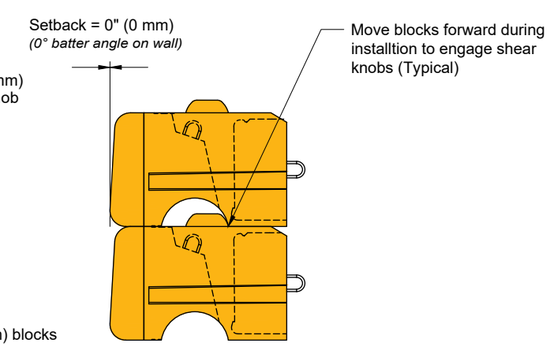

Available with:
- 28" (710 mm) blocks, 41" (1030 mm) blocks, and 60" (1520 mm) blocks
- 28" (710 mm) PC blocks (shown here) and 41" (1030 mm) PC blocks

Block Setback Options

Redi-Rock has two options for large batter retaining walls. Both options are created by relocating the knob so that it is further back in the Redi-Rock blocks compared to our smaller batter walls (5° and less). There are two knob locations further back in the block which create the 9" (230 mm) setback block and the planter block. Blocks made with knobs in either of these locations almost exclusively use 10" (254 mm) diameter knobs.

9" (230 mm) Setback Blocks

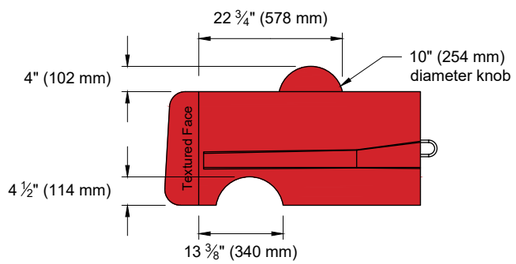

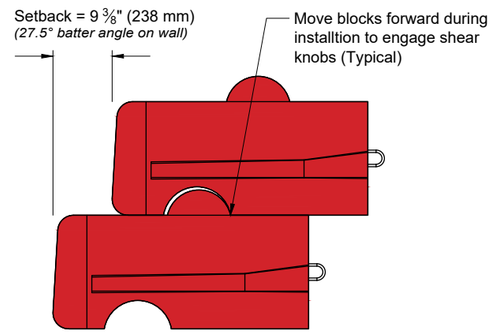

Available with:
- 41" (1030 mm) blocks (shown here) and 60" (1520 mm) blocks
- Not available in PC blocks

Planter Blocks

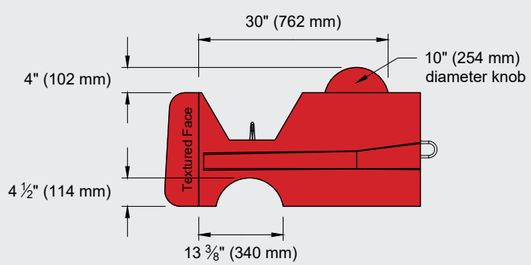

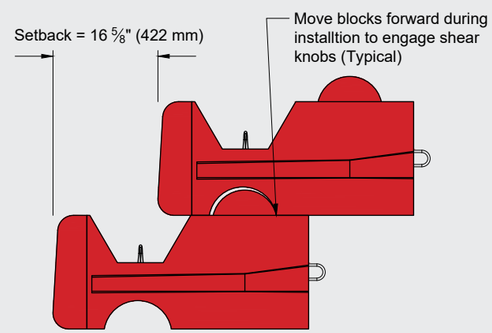

Available with:
- 41" (1030 mm) blocks (shown here) and 60" (1520 mm) blocks
- Not available in PC blocks

Block Setback

The block-to-block setback available with 36" (914 mm) high Redi-Rock XL hollow-core retaining blocks is controlled by the location of the shear knobs cast into the blocks. The 3 1/4" (83 mm) setback between courses creates a 5° batter angle on the back of the wall which is consistent with the batter angle created by 18" (457 mm) high Redi-Rock blocks with 10" (254 mm) shear knobs.

36" (914 mm) High XL Hollow-Core Retaining Blocks

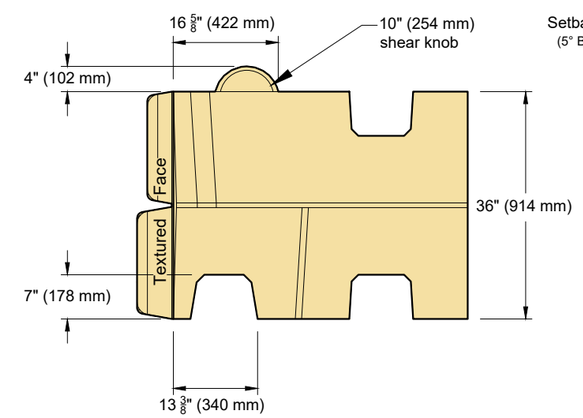

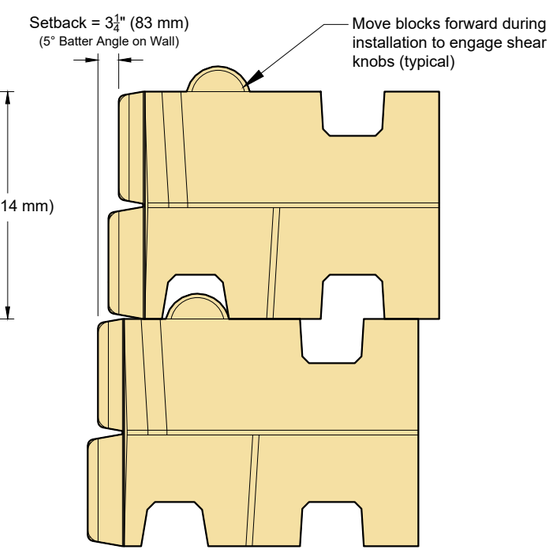

The relative knob and groove configuration, and resulting setback, are consistent between the 52" (1320 mm), 72" (1830 mm), and 96" (2440 mm) XL hollow-core retaining blocks.

Interface Shear Report 6.75” (171 mm)

Test Methods: ASTM D6916 & NCMA SRWU-2

Test Facility: Bathurst, Clarabut Geotechnical Testing, Inc.

Block Type: 28” (710 mm) Positive Connection (PC) Block

Test Dates: 10/21/2011 - 6.75” (171 mm) Shear Knob Test

6.75” (171 mm) KNOB INTERFACE SHEAR DATA[a]

Test No.	Normal Load lb/ft	Normal Load (kN/m)	Service State Shear[b] lb/ft	Service State Shear[b] (kN/m)	Peak Shear lb/ft	Peak Shear (kN/m)	Observed Failure[c]
1	522	(7.618)	838	(12.230)	1,724	(25.160)	Test Stopped
2	19,209	(280.334)	11,324	(165.261)	11,324	(165.261)	Test Stopped
3	16,303	(237.924)	11,252	(164.211)	11,252	(164.211)	Test Stopped
4	13,612	(198.652)	11,036	(161.058)	11,036	(161.058)	Test Stopped
5	11,075	(161.627)	10,462	(152.681)	10,462	(152.681)	Test Stopped
6	11,074	(161.613)	11,060	(161.409)	11,252	(164.211)	Knob Shear
7	8,299	(121.115)	10,408	(151.893)	11,204	(163.510)	Test Stopped
8	5,854	(85.433)	8,337	(121.669)	9,935	(144.990)	Knob Shear
9	3,077	(44.905)	5,722	(83.506)	6,153	(89.796)	Knob Shear
10	10,981	(160.256)	10,821	(157.921)	11,252	(164.211)	Knob Shear

Peak Shear[d]: S_p = 1,178 + N tan 54° ≤ 10,970 lb/ft (S_p = 17.19 + N tan 54° ≤ 160.1 kN/m)

Service State Shear [d]: S_{ss} = 616 + N tan 52° ≤ 10,970 lb/ft (S_{ss} = 8.99 + N tan 52° ≤ 160.1 kN/m)

6.75” (171 mm) KNOB INTERFACE SHEAR CAPACITY

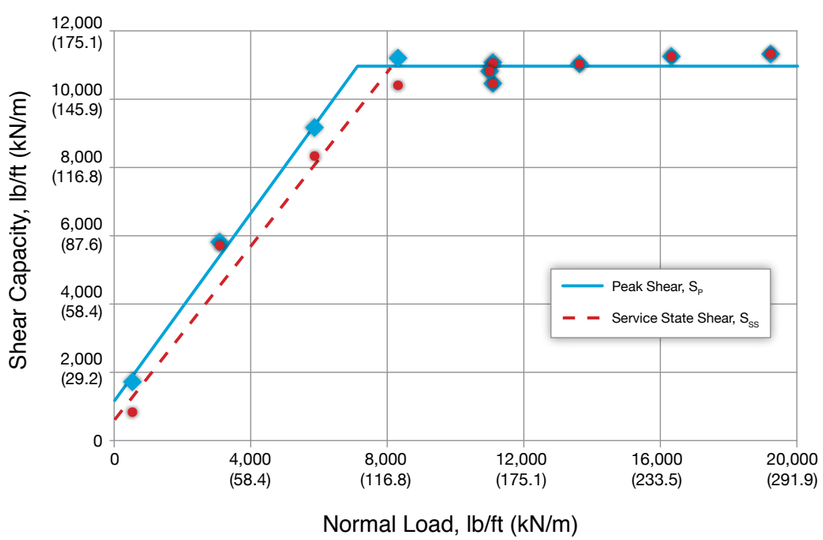

(a) The 28-day compressive strength of all concrete blocks tested in the 10-inch (254-millimeter) knob interface shear test series was 4,474 psi.

(b) Service State Shear is measured at a horizontal displacement equal to 2% of the block height. For Redi-Rock blocks, displacement = 0.36 inches (9.144 millimeters).

(c) In most cases, the test was stopped before block rupture or knob shear occurred to prevent damage to the test apparatus.

(d) Design shear capacity inferred from the test data reported herein should be lowered when test failure results from block rupture or knob shear if the compressive strength of the blocks used in design is less than the blocks used in this test. The data reported represents the actual laboratory test results. The equations for peak and service state shear conditions have been modified to reflect the interface shear performance of concrete with a minimum 28-day compressive strength equal to 4,000 psi. No further adjustments have been made. Appropriate factors of safety for design should be added.

The information contained in this report has been compiled by Redi-Rock International, LLC as a recommendation of peak interface shear capacity. It is accurate to the best of our knowledge as of the date of its issue. However, final determination of the suitability of any design information and the appropriateness of this data for a given design purpose is the sole responsibility of the user. No warranty of performance is expressed or implied by the publishing of the foregoing laboratory test results. Issue date: January 26, 2015.

Interface Shear Report 10” (254 mm)

Test Methods: ASTM D6916 & NCMA SRWU-2

Test Facility: Bathurst, Clarabut Geotechnical Testing, Inc.

Block Type: 28” (710 mm) Positive Connection (PC) Block

10/14/2011 - 10” (254 mm) Shear Knob Test

10" (254 mm) KNOB INTERFACE SHEAR DATA[a]

Test No.	Normal Load lb/ft	Normal Load (kN/m)	Service State Shear[b] lb/ft	Service State Shear[b] (kN/m)	Peak Shear lb/ft	Peak Shear (kN/m)	Observed Failure[c]
1	19,619	(286.318)	11,300	(164.911)	11,300	(164.911)	Test Stopped
2	16,007	(233.605)	11,300	(164.911)	11,300	(164.911)	Test Stopped
3	13,546	(197.689)	11,371	(165.947)	11,371	(165.947)	Test Stopped
4	11,042	(161.146)	11,371	(165.947)	11,371	(165.947)	Test Stopped
5	8,400	(122.589)	11,204	(163.510)	11,204	(163.510)	Test Stopped
6	10,999	(160.518)	11,252	(164.211)	11,252	(164.211)	Test Stopped
7	10,922	(159.395)	11,252	(164.211)	11,252	(164.211)	Test Stopped
8	5,786	(84.440)	10,414	(151.981)	11,156	(162.810)	Test Stopped
9	3,137	(45.781)	7,469	(109.002)	10,174	(148.478)	Test Stopped
10	522	(7.618)	3,926	(57.296)	6,033	(88.045)	Test Stopped

Peak Shear: S_p = 6,061 + N tan 44° ≤ 11,276 lb/ft (S_p = 88.45 + N tan 44° ≤ 164.56 kN/m)

Service State Shear: S_{ss} = 3,390 + N tan 51° ≤ 11,276 lb/ft (S_{ss} = 49.47 + N tan 51° ≤ 164.56 kN/m)

10” (254 mm) KNOB INTERFACE SHEAR CAPACITY

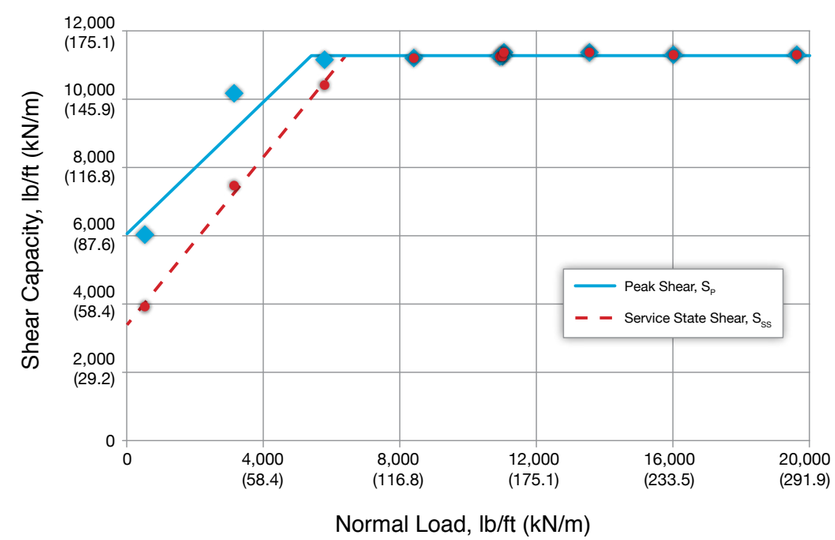

(a) The 28-day compressive strength of all concrete blocks tested in the 10-inch (254-millimeter) knob interface shear test series was 4,474 psi.

(b) Service State Shear is measured at a horizontal displacement equal to 2% of the block height. For Redi-Rock blocks, displacement = 0.36 inches (9.144 millimeters).

(c) In most cases, the test was stopped before block rupture or knob shear occurred to prevent damage to the test apparatus.

(d) Design shear capacity inferred from the test data reported herein should be lowered when test failure results from block rupture or knob shear if the compressive strength of the blocks used in design is less than the blocks used in this test. The data reported represents the actual laboratory test results. The equations for peak and service state shear conditions have been modified to reflect the interface shear performance of concrete with a minimum 28-day compressive strength equal to 4,000 psi. No further adjustments have been made. Appropriate factors of safety for design should be added.

The information contained in this report has been compiled by Redi-Rock International, LLC as a recommendation of peak interface shear capacity. It is accurate to the best of our knowledge as of the date of its issue. However, final determination of the suitability of any design information and the appropriateness of this data for a given design purpose is the sole responsibility of the user. No warranty of performance is expressed or implied by the publishing of the foregoing laboratory test results. Issue date: January 26, 2015.

Project: Presbyterian West Side Project ***Owner:*** Presbyterian Hospital ***Wall Engineer:*** Don Maccornack ***Project Design Engineer:*** Bohannan Huston ***Architect:*** Dekker Perich Sabatini ***Installer:*** Sall's Brothers ***Manufacturer:*** Materials Inc./Buildology ***Location:*** Albuquerque, New Mexico ***Completed:*** 2010

Interface Shear Report XL Hollow-Core Retaining Block

Test Methods: ASTM D6916 & NCMA SRWU-2

Block Type: R-5236 52" Hollow-Core Retaining Block

INTERFACE SHEAR DATA[a]

Tested By: TRI Environmental | Dec. 10-21, 2017

Test No.	Normal Load lb/ft	Normal Load (kN/m)	Peak Shear lb/ft	Peak Shear (kN/m)	Observed Failure[c]
1	872	(12.719)	3,812	(55.630)	Test stopped - uplift
2	5,026	(73.350)	11,503	(167.877)	Knob/face shear
3	872	(12.719)	3,383	(49.376)	Test stopped - uplift
4	16,562	(241.704)	16,962	(247.537)	Test stopped - capacity
5	2,062	(30.098)	6,970	(101.714)	Test stopped - uplift
6	3,539	(51.642)	9,857	(143.848)	Test stopped - uplift
7	7,773	(113.442)	11,210	(163.598)	Knob/face shear
8	7,765	(113.318)	10,601	(154.710)	Test stopped - back cracked
9	7,656	(111.733)	12,405	(181.044)	Test stopped - back cracked
10	6,541	(95.458)	12,112	(176.765)	Test stopped - uplift
11	12,496	(182.360)	13,962	(203.757)	Test stopped - back cracked

Peak Shear Envelope:[c]

$S_{p(1)} = 4547 + N \tan 44°$ (N < 7,017 lb/ft)

$S_{p(2)} = 8488 + N \tan 22°$ (7017 lb/ft ≤ N < 16,118 lb/ft)

$S_{p(max)} = 15{,}000$ lb/ft (N ≥ 16,118 lb/ft)

Tested By: Redi-Rock International | Mar. 14-23, 2018

Test No.	Normal Load lb/ft	Normal Load (kN/m)	Peak Shear lb/ft	Peak Shear (kN/m)	Observed Failure[c]
1	7,759	(113.240)	15,635	(228.179)	Test stopped - back cracked
2	7,840	(114.409)	15,843	(231.213)	Test stopped - back cracked
3	7,761	(113.270)	13,859	(202.255)	Knob/face shear
4	16,617	(242.509)	17,070	(249.119)	Test stopped - back cracked
5	12,588	(183.705)	17,305	(252.543)	Knob/face shear
6	842	(12.294)	6,643	(96.951)	Knob/face shear
7	858	(12.522)	6,708	(97.900)	Knob/face shear
8	2,324	(33.910)	9,102	(132.827)	Test stopped - back cracked
9	3,609	(52.666)	11,747	(171.436)	Test stopped - back cracked
10	5,060	(73.848)	10,943	(159.697)	Test stopped - back cracked
11	6,612	(96.489)	12,978	(189.395)	Test stopped - back cracked

Inflection Points:

$N_1 = 0$ lb/ft $S_1 = 4547$ lb/ft

$N_2 = 7017$ lb/ft $S_2 = 11{,}323$ lb/ft

$N_3 = 16{,}118$ lb/ft $S_3 = 15{,}000$ lb/ft

INTERFACE SHEAR CAPACITY

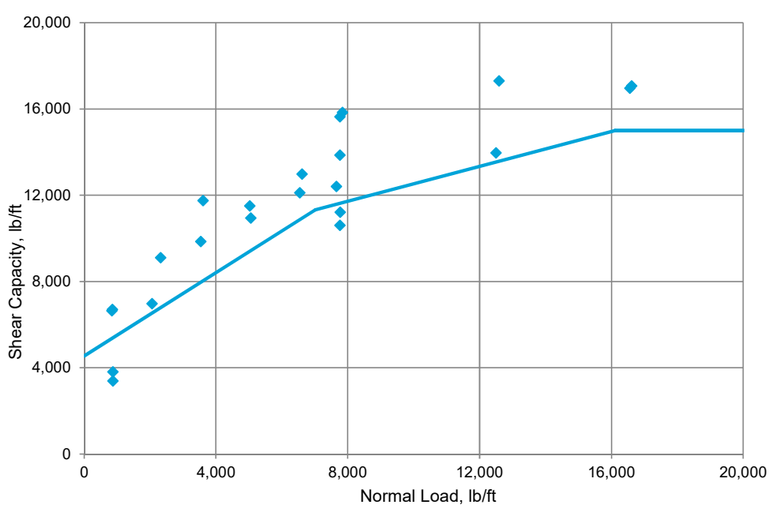

(a) The average compressive strength at the time of testing of all concrete blocks tested in the XL hollow- core retaining block test series was 5,350 psi.

(b) In many cases, the test was stopped before peak shear load occured because of significant uplift of upper block, damage to the back of upper block where horizontal load was applied, or maximum capacity of test apparatus was reached.

(c) Design shear capacity inferred from the test data reported herein should be lowered when test failure results from block rupture or knob shear if the compressive strength of the blocks used in design is less than the blocks used in this test. The data reported represents the actual laboratory test results. The equations for peak shear conditions have been modified to reflect the interface shear performance of concrete with a minimum 28-day compressive strength equal to 4,000 psi. No further adjustments have been made. Appropriate factors of safety for design should be added.

The information contained in this report has been compiled by Redi-Rock International, LLC as a recommendation of peak interface shear capacity. It is accurate to the best of our knowledge as of the date of its issue. However, final determination of the suitability of any design information and the appropriateness of this data for a given design purpose is the sole responsibility of the user. No warranty of performance is expressed or implied by the publishing of the foregoing laboratory test results.

redi-rock.com

Geogrid Connection Design Parameters—Miragrid 5XT

Test Methods: ASTM D6638 & NCMA SRWU-1

Test Facility: Bathurst, Clarabut Geotechnical Testing, Inc.

Geogrid Type: Miragrid 5XT

Test Date: February 17, 2011

Block Type: Positive Connection (PC) Block

CONNECTION STRENGTH TEST DATA[a]

Test No.	Normal Load lb/ft	Normal Load (kN/m)	Peak Connection lb/ft	Peak Connection (kN/m)	Observed Failure
1	2,236	(32.6)	5,040	(73.6)	Grid Rupture
2	775	(11.3)	4,860	(70.9)	Grid Rupture
3	5,165	(75.4)	4,444	(64.9)	Grid Rupture
4	2,242	(32.7)	4,343	(63.4)	Grid Rupture
5	1,649	(24.1)	4,658	(68.0)	Grid Rupture
6	3,123	(45.6)	4,680	(68.3)	Grid Rupture
7	2,236	(32.6)	4,838	(70.6)	Grid Rupture
8	3,991	(58.2)	4,444	(64.9)	Grid Rupture

Peak Connection$_{(average)}$ = 4,663 lb/ft (68.1 kN/m)

Peak Connection$_{(95\% \text{ confidence level})}$[b] = 4,460 lb/ft (65.1 kN/m)

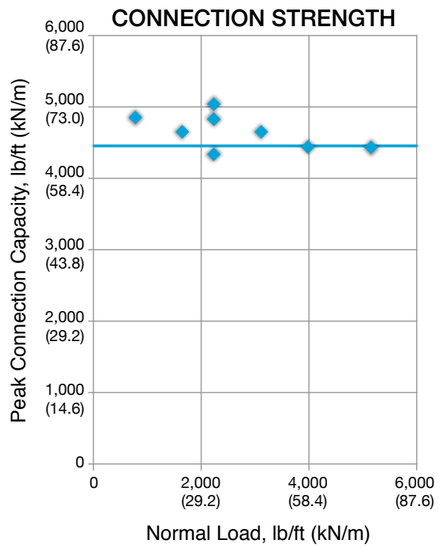

CONNECTION DESIGN DATA

for use with AASHTO LRFD Bridge Design Specifications, 6th Edition (2012)

Miragrid 5XT Ultimate Tensile Strength (MARV) T_{ult}	= 4,700 lb/ft (68.1 kN/m)
Ultimate Connection Strength $T_{ultconn}$	= 4,460 lb/ft (65.1 kN/m)
Ultimate Tensile Strength of Geosynthetic Test Sample T_{lot}	= 5,334 lb/ft (77.8 kN/m)
Connection Strength / Sample Strength $T_{ultconn}$ / T_{lot}	= 0.84
Short-term Ultimate Connection Strength Reduction Factor[c] CR_u	= 0.84
Creep Reduction Factor	
75-Year Design $RF_{cr(75)}$	= 1.56
100-Year Design $RF_{cr(100)}$	= 1.58
Durability Reduction Factor[d] RF_D	= 1.15
Long-term Connection Strength Reduction Factor	
75-Year Design $CR_{cr(75)}$	= 0.54
100-Year Design $CR_{cr(100)}$	= 0.53
Nominal Long-term Geosynthetic Connection Strength	
75-Year Design $T_{ac(75)}$	= 2,201 lb/ft (32.1 kN/m)
100-Year Design $T_{ac(100)}$	= 2,173 lb/ft (31.7 kN/m)

(a) Tested with 3/4 inch (19 mm) clean crushed stone lightly compacted in the vertical core slot in accordance with Redi-Rock International's typical installation recommendations.

(b) Because the geogrid connection is not normal-load dependent and an expression of peak connection for use in design cannot be reliably determined through linear regression, the peak connection results are analyzed as continuous random variables. The average value or sample mean is reported for the test sample as well as a reduction based upon a 95% confidence interval calculated from the Student's t-test for n-1 degrees of freedom.

(c) Recommended CR_u for design is based on a statistical best-fit analysis of $T_{ultconn}$ / T_{lot} values across all geogrid types tested.

(d) Recommended value for 5 < pH < 8. RF_D value of 1.3 recommended for 4.5 ≤ pH ≤ 5 and 8 ≤ pH ≤ 9.

The information contained in this report has been carefully compiled by Redi-Rock International, LLC as a recommendation of peak connection capacity. It is accurate to the best of our knowledge as of the date of its issue. However, final determination of the suitability of any design information and the appropriateness of this data for a given design purpose is the sole responsibility of the user. No warranty of performance is expressed or implied by the publishing of the foregoing laboratory test results. Issue date: May 12, 2014.

Geogrid Connection Design Parameters—Miragrid 8XT

Test Methods: ASTM D6638 & NCMA SRWU-1

Test Facility: Bathurst, Clarabut Geotechnical Testing, Inc.

Geogrid Type: Miragrid 8XT

Test Date: December 16, 2011

Block Type: Positive Connection (PC) Block

CONNECTION STRENGTH TEST DATA[a]

Test No.	Normal Load lb/ft	Normal Load (kN/m)	Peak Connection lb/ft	Peak Connection (kN/m)	Observed Failure
1	1,960	(28.6)	7,995	(116.7)	Grid Rupture
2	241	(3.5)	7,949	(116.0)	Grid Rupture
3	1,125	(16.4)	7,904	(115.4)	Grid Rupture
4	2,036	(29.7)	7,949	(116.0)	Grid Rupture
5	2,914	(42.5)	8,269	(120.7)	Grid Rupture
6	3,715	(54.2)	7,995	(116.7)	Grid Rupture
7	1,900	(27.7)	8,452	(123.3)	Grid Rupture
8	4,551	(66.4)	8,269	(120.7)	Grid Rupture

Peak Connection$_{(average)}$ = 8,098 lb/ft (118.2 kN/m)

Peak Connection$_{(95\% \text{ confidence level})}$[b] = 7,928 lb/ft (115.7 kN/m)

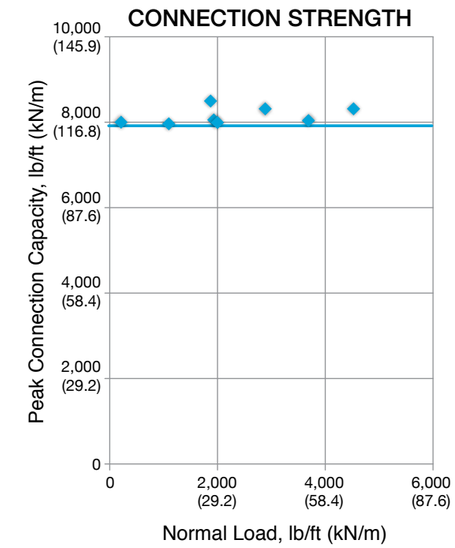

CONNECTION DESIGN DATA

for use with AASHTO LRFD Bridge Design Specifications, 6th Edition (2012)

Miragrid 8XT Ultimate Tensile Strength (MARV) T_{ult}	= 7,400 lb/ft (108.0 kN/m)
Ultimate Connection Strength $T_{ultconn}$	= 7,928 lb/ft (115.7 kN/m)
Ultimate Tensile Strength of Geosynthetic Test Sample T_{lot}	= 8,055 lb/ft (117.6 kN/m)
Connection Strength / Sample Strength $T_{ultconn}$ / T_{lot}	= 0.98
Short-term Ultimate Connection Strength Reduction Factor[c] CR_u	= 0.84
Creep Reduction Factor	
75-Year Design $RF_{cr(75)}$	= 1.56
100-Year Design $RF_{cr(100)}$	= 1.58
Durability Reduction Factor[d] RF_D	= 1.15
Long-term Connection Strength Reduction Factor	
75-Year Design $CR_{cr(75)}$	= 0.54
100-Year Design $CR_{cr(100)}$	= 0.53
Nominal Long-term Geosynthetic Connection Strength	
75-Year Design $T_{ac(75)}$	= 3,465 lb/ft (50.6 kN/m)
100-Year Design $T_{ac(100)}$	= 3,421 lb/ft (49.9 kN/m)

(a) Tested with 3/4 inch (19 mm) clean crushed stone lightly compacted in the vertical core slot in accordance with Redi-Rock International's typical installation recommendations.

(b) Because the geogrid connection is not normal-load dependent and an expression of peak connection for use in design cannot be reliably determined through linear regression, the peak connection results are analyzed as continuous random variables. The average value or sample mean is reported for the test sample as well as a reduction based upon a 95% confidence interval calculated from the Student's t-test for n-1 degrees of freedom.

(c) Recommended CR_u for design is based on a statistical best-fit analysis of $T_{ultconn}$ / T_{lot} values across all geogrid types tested.

(d) Recommended value for 5 < pH < 8. RF_D value of 1.3 recommended for 4.5 ≤ pH ≤ 5 and 8 ≤ pH ≤ 9.

The information contained in this report has been carefully compiled by Redi-Rock International, LLC as a recommendation of peak connection capacity. It is accurate to the best of our knowledge as of the date of its issue. However, final determination of the suitability of any design information and the appropriateness of this data for a given design purpose is the sole responsibility of the user. No warranty of performance is expressed or implied by the publishing of the foregoing laboratory test results. Issue date: May 12, 2014.

Geogrid Connection Design Parameters—Miragrid 10XT

Test Methods: ASTM D6638 & NCMA SRWU-1

Test Facility: Bathurst, Clarabut Geotechnical Testing, Inc.

Geogrid Type: Miragrid 10XT

Test Date: November 28, 2011

Block Type: Positive Connection (PC) Block

CONNECTION STRENGTH TEST DATA[a]

Test No.	Normal Load lb/ft	Normal Load (kN/m)	Peak Connection lb/ft	Peak Connection (kN/m)	Observed Failure
1	1,990	(29.0)	9,046	(132.0)	Grid Rupture
2	228	(3.3)	8,452	(123.3)	Grid Rupture
3	1,147	(16.7)	8,589	(125.3)	Grid Rupture
4	2,067	(30.2)	9,365	(136.7)	Grid Rupture
5	2,918	(42.6)	8,863	(129.3)	Grid Rupture
6	3,830	(55.9)	9,594	(140.0)	Grid Rupture
7	2,067	(30.2)	9,000	(131.3)	Grid Rupture
8	4707	(68.7)	9,046	(132.0)	Grid Rupture

Peak Connection$_{(average)}$ = 8,994 lb/ft (131.3 kN/m)

Peak Connection$_{(95\% \text{ confidence level})}$[b] = 8,681 lb/ft (126.7 kN/m)

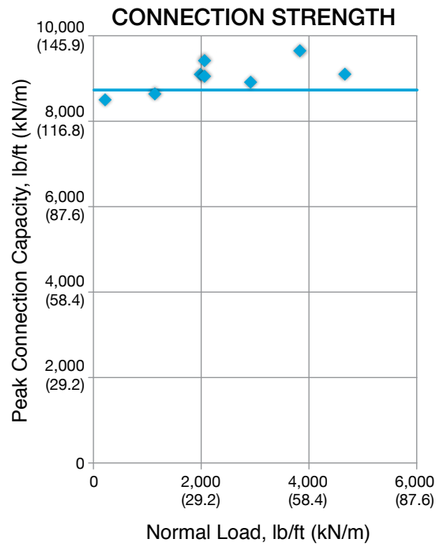

CONNECTION DESIGN DATA

for use with AASHTO LRFD Bridge Design Specifications, 6th Edition (2012)

Miragrid 10XT Ultimate Tensile Strength (MARV) T_{ult} = 9,500 lb/ft (138.6 kN/m)	
Ultimate Connection Strength $T_{ultconn}$ = 8,681 lb/ft (126.7 kN/m)	
Ultimate Tensile Strength of Geosynthetic Test Sample T_{lot} = 10,635 lb/ft (155.2 kN/m)	
Connection Strength / Sample Strength $T_{ultconn}$ / T_{lot} = 0.82	
Short-term Ultimate Connection Strength Reduction Factor[c] CR_u = 0.82	
Creep Reduction Factor	
75-Year Design $RF_{cr(75)}$ = 1.56	
100-Year Design $RF_{cr(100)}$ = 1.58	
Durability Reduction Factor[d] RF_D = 1.15	
Long-term Connection Strength Reduction Factor	
75-Year Design $CR_{cr(75)}$ = 0.53	
100-Year Design $CR_{cr(100)}$ = 0.52	
Nominal Long-term Geosynthetic Connection Strength	
75-Year Design $T_{ac(75)}$ = 4,342 lb/ft (63.4 kN/m)	
100-Year Design $T_{ac(100)}$ = 4,287 lb/ft (62.6 kN/m)	

(a) Tested with 3/4 inch (19 mm) clean crushed stone lightly compacted in the vertical core slot in accordance with Redi-Rock International's typical installation recommendations.

(b) Because the geogrid connection is not normal-load dependent and an expression of peak connection for use in design cannot be reliably determined through linear regression, the peak connection results are analyzed as continuous random variables. The average value or sample mean is reported for the test sample as well as a reduction based upon a 95% confidence interval calculated from the Student's t-test for n-1 degrees of freedom.

(c) Recommended CR_u for design is based on a statistical best-fit analysis of $T_{ultconn}$ / T_{lot} values across all geogrid types tested.

(d) Recommended value for 5 < pH < 8. RF_D value of 1.3 recommended for 4.5 ≤ pH ≤ 5 and 8 ≤ pH ≤ 9.

The information contained in this report has been carefully compiled by Redi-Rock International, LLC as a recommendation of peak connection capacity. It is accurate to the best of our knowledge as of the date of its issue. However, final determination of the suitability of any design information and the appropriateness of this data for a given design purpose is the sole responsibility of the user. No warranty of performance is expressed or implied by the publishing of the foregoing laboratory test results. Issue date: May 12, 2014.

Geogrid Connection Design Parameters—Miragrid 20XT

Test Methods: ASTM D6638 & NCMA SRWU-1

Test Facility: Bathurst, Clarabut Geotechnical Testing, Inc.

Geogrid Type: Miragrid 20XT

Test Date: December 16, 2011

Block Type: Positive Connection (PC) Block

CONNECTION STRENGTH TEST DATA[a]

Test No.	Normal Load lb/ft	Normal Load (kN/m)	Peak Connection lb/ft	Peak Connection (kN/m)	Observed Failure
1	2,608	(38.1)	13,797	(201.4)	Grid Rupture
2	802	(11.7)	13,980	(204.0)	Grid Rupture
3	1,654	(24.1)	13,934	(203.4)	Grid Rupture
4	2,521	(36.8)	14,299	(208.7)	Grid Rupture
5	3,527	(51.5)	12,837	(187.3)	Grid Rupture
6	4,302	(62.8)	13,797	(201.4)	Grid Rupture
7	2,573	(37.6)	14,345	(209.3)	Grid Rupture
8	5,196	(75.8)	13,706	(200.0)	Grid Rupture

Peak Connection$_{(average)}$ = 13,837 lb/ft (201.9 kN/m)

Peak Connection$_{(95\% \text{ confidence level})}$[b] = 13,447 lb/ft (196.2 kN/m)

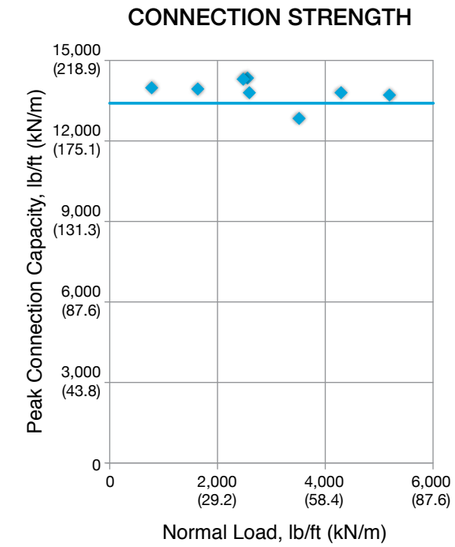

CONNECTION DESIGN DATA

for use with AASHTO LRFD Bridge Design Specifications, 6th Edition (2012)

Miragrid 20XT Ultimate Tensile Strength (MARV) T_{ult} = 13,705 lb/ft (200.0 kN/m)	
Ultimate Connection Strength $T_{ultconn}$ = 13,447 lb/ft (196.2 kN/m)	
Ultimate Tensile Strength of Geosynthetic Test Sample T_{lot} = 16,397 lb/ft (239.3 kN/m)	
Connection Strength / Sample Strength $T_{ultconn}$ / T_{lot} = 0.82	
Short-term Ultimate Connection Strength Reduction Factor[c] CR_u = 0.80	
Creep Reduction Factor	
75-Year Design $RF_{cr(75)}$ = 1.56	
100-Year Design $RF_{cr(100)}$ = 1.58	
Durability Reduction Factor[d] RF_D = 1.15	
Long-term Connection Strength Reduction Factor	
75-Year Design $CR_{cr(75)}$ = 0.51	
100-Year Design $CR_{cr(100)}$ = 0.51	
Nominal Long-term Geosynthetic Connection Strength	
75-Year Design $T_{ac(75)}$ = 6,111 lb/ft (89.2 kN/m)	
100-Year Design $T_{ac(100)}$ = 6,034 lb/ft (88.1 kN/m)	

(a) Tested with 3/4 inch (19 mm) clean crushed stone lightly compacted in the vertical core slot in accordance with Redi-Rock International's typical installation recommendations.

(b) Because the geogrid connection is not normal-load dependent and an expression of peak connection for use in design cannot be reliably determined through linear regression, the peak connection results are analyzed as continuous random variables. The average value or sample mean is reported for the test sample as well as a reduction based upon a 95% confidence interval calculated from the Student's t-test for n-1 degrees of freedom.

(c) Recommended CR_u for design is based on a statistical best-fit analysis of $T_{ultconn}$ / T_{lot} values across all geogrid types tested.

(d) Recommended value for 5 < pH < 8. RF_D value of 1.3 recommended for 4.5 ≤ pH ≤ 5 and 8 ≤ pH ≤ 9.

The information contained in this report has been carefully compiled by Redi-Rock International, LLC as a recommendation of peak connection capacity. It is accurate to the best of our knowledge as of the date of its issue. However, final determination of the suitability of any design information and the appropriateness of this data for a given design purpose is the sole responsibility of the user. No warranty of performance is expressed or implied by the publishing of the foregoing laboratory test results. Issue date: May 12, 2014.

Geogrid Connection Design Parameters—Miragrid 24XT

Test Methods: ASTM D6638 & NCMA SRWU-1

Test Facility: Bathurst, Clarabut Geotechnical Testing, Inc.

Geogrid Type: Miragrid 24XT

Test Date: February 29, 2012

Block Type: Positive Connection (PC) Block

CONNECTION STRENGTH TEST DATA[a]

Test No.	Normal Load lb/ft	Normal Load (kN/m)	Peak Connection lb/ft	Peak Connection (kN/m)	Observed Failure
1	4,046	(59.0)	20,375	(297.4)	Grid Rupture
2	4,362	(63.7)	22,020	(321.4)	Grid Rupture
3	665	(9.7)	22,568	(329.4)	Grid Rupture
4	2,538	(37.0)	20,832	(304.0)	Grid Rupture
5	1,713	(25.0)	21,746	(317.4)	Grid Rupture
6	5,248	(76.6)	21,837	(318.7)	Block & Grid
7	2,539	(37.1)	19,914	(290.6)	Grid Rupture
8	4,063	(59.3)	21,015	(306.7)	Block Rupture

Peak Connection$_{(average)}$ = 21,288 lb/ft (310.7 kN/m)

Peak Connection$_{(95\% \text{ confidence level})}$[b] = 20,535 lb/ft (299.7 kN/m)

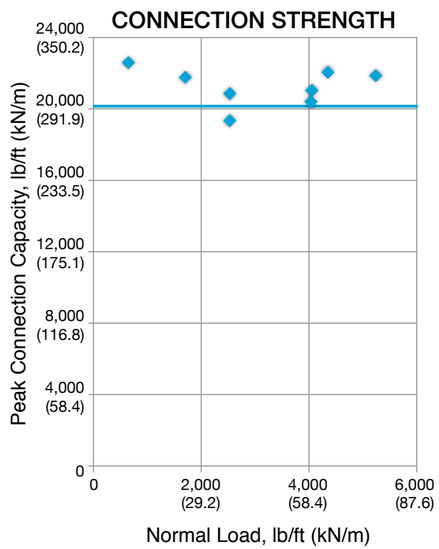

CONNECTION DESIGN DATA

for use with AASHTO LRFD Bridge Design Specifications, 6th Edition (2012)

Miragrid 24XT Ultimate Tensile Strength (MARV) T_{ult} = 27,415 lb/ft (400.1 kN/m)	
Ultimate Connection Strength $T_{ultconn}$ = 20,535 lb/ft (299.7 kN/m)	
Ultimate Tensile Strength of Geosynthetic Test Sample T_{lot} = 29,130 lb/ft (425.1 kN/m)	
Connection Strength / Sample Strength $T_{ultconn}$ / T_{lot} = 0.70	
Short-term Ultimate Connection Strength Reduction Factor[c] CR_u = 0.70	
Creep Reduction Factor	
75-Year Design $RF_{cr(75)}$ = 1.56	
100-Year Design $RF_{cr(100)}$ = 1.58	
Durability Reduction Factor [d] RF_D = 1.15	
Long-term Connection Strength Reduction Factor	
75-Year Design $CR_{cr(75)}$ = 0.45	
100-Year Design $CR_{cr(100)}$ = 0.45	
Nominal Long-term Geosynthetic Connection Strength	
75-Year Design $T_{ac(75)}$ = 10,773 lb/ft (157.2 kN/m)	
100-Year Design $T_{ac(100)}$ = 10,636 lb/ft (155.2 kN/m)	

(a) Tested with 3/4 inch (19 mm) clean crushed stone lightly compacted in the vertical core slot in accordance with Redi-Rock International's typical installation recommendations.

(b) Because the geogrid connection is not normal-load dependent and an expression of peak connection for use in design cannot be reliably determined through linear regression, the peak connection results are analyzed as continuous random variables. The average value or sample mean is reported for the test sample as well as a reduction based upon a 95% confidence interval calculated from the Student's t-test for n-1 degrees of freedom.

(c) Recommended CR_u for design is based on a statistical best-fit analysis of $T_{ultconn}$ / T_{lot} values across all geogrid types tested.

(d) Recommended value for 5 < pH < 8. RF_D value of 1.3 recommended for 4.5 ≤ pH ≤ 5 and 8 ≤ pH ≤ 9.

Geogrid Packaging, Ordering, and Delivery

Geogrid for Redi-Rock Positive Connection (PC) System retaining walls is provided in 12 inch (305 millimeter) wide strips in 200 feet (61 meters) long rolls. Geogrids approved for use are Mirafi XT manufactured by TenCate Geosynthetics of Pendergrass, Georgia, USA. The geogrid strips are factory cut to width and are certified for width and strength by TenCate Mirafi. **Other geogrid products or strips that are field cut to width from larger rolls are not allowed.**

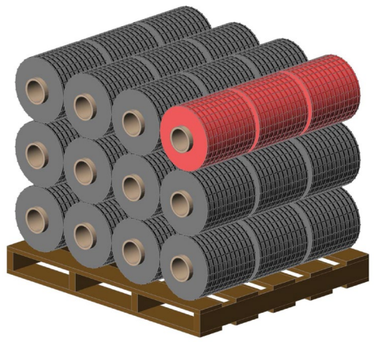

The geogrid is packaged with 3 rolls on each cardboard tube. Total number of rolls that can be placed on a pallet varies with product type.

Geogrid	Rolls Per Pallet	Pallet Weight
5XT	60	743 lb (337 kg)
8XT	48	764 lb (346 kg)
10XT	48	958 lb (434 kg)
20 XT	27	503 lb (228 kg)
24XT	27	1,478 lb (670 kg)

Geogrid strips are available exclusively through the Redi-Rock network of independently-owned and -operated, licensed manufacturers. Contact information for the Redi-Rock manufacturer in your area is available at **redi-rock.com**.

Typically, the geogrid strips are ordered by the pallet. If your project doesn't require a full pallet of geogrid strips, smaller tube quantities may be available from your Redi-Rock manufacturer.

Additionally, custom roll lengths between 150 feet (45 meters) and 250 feet (76 meters) are available in quantities greater than 48 pallets of the same geogrid type. Plan ahead because a minimum 10 week lead time is required for custom lengths.

GEOGRID ESTIMATING

Geogrid estimating for a project is a simple process:

- Determine the cut length of strips for your different wall sections.
- Roll length / cut length = number of whole strips you can get from each roll of geogrid.
- Total number of required strips / number of strips per roll = total number of rolls you need to order.

The preliminary charts list an approximate length of geogrid for estimating purposes. The example below is for a 21 foot (6.4 meter) tall wall section in 30° soil with no surcharge loads or slopes:

Type	Rolls per linear foot	Rolls per linear meter
5XT	±0.26	±0.85
10XT	±0.30	±1.00

In this example, the geogrid required to build a 100 foot (30.5 meter) long section of wall (26 blocks long) is:

100 x 0.26 = 26 rolls of 5XT

100 x 0.30 = 30 rolls of 10XT

(This information is included with each cross section in the Preliminary Reinforcement Schedule in the MSE Wall section of the DRM.)

Minimum Turning Radius

Convex curves can easily be incorporated into a Redi-Rock wall. Redi-Rock blocks are tapered 7½° on each side. The smallest radius that can be made with Redi-Rock blocks (without cutting the blocks) occurs when the blocks are placed together with their sides touching. This minimum radius for full size blocks is 14 feet - 6 inches (4.42 m) from the face of the blocks.

Block to block setback will cause the radius for each succeeding row to be smaller than the row below. To ensure the minimum radius for the top row of blocks in a wall, start with the minimum radius and then add 2” (51 mm) per course for each standard setback block 18-inch high block, 10” (254 mm) per course for each 9” (230 mm) setback block, and 17” (432 mm) per course for each planter block in the wall below the top row of blocks. For 36-inch high XL blocks, add 4” (101.6 mm) per row.

MINIMUM RADIUS FOR BOTTOM ROW OF BLOCKS

	18-INCH (457 mm) HIGH BLOCKS	36-INCH (914 mm) HIGH XL BLOCKS
Height of Wall	Radius From Face of Block	Radius From Face of Block
1’-6” (0.46 m)	14’-6” (4.42 m)	
3’-0” (0.91 m)	14’-8” (4.47 m)	
4’-6” (1.37 m)	14’-10” (4.52 m)	
6’-0” (1.83 m)	15’-0” (4.57 m)	15’-0” (4.57 m)
7’-6” (2.29 m)	15’-2” (4.62 m)	15’-2” (4.62 m)
9’-0” (2.74 m)	15’-4” (4.67 m)	15’-4” (4.67 m)
10’-6” (3.20 m)	15’-6” (4.72 m)	15’-6” (4.72 m)
12’-0” (3.66 m)	15’-8” (4.78 m)	15’-8” (4.78 m)
13’-6” (4.11 m)	15’-10” (4.83 m)	15’-10” (4.83 m)
15’-0” (4.57 m)	16’-0” (4.88 m)	16’-0” (4.88 m)
16’-6” (5.03 m)		16’-2” (*.** m)
18’-0” (5.49 m)		6’-4” (4.98 m)
19’-6” (5.94 m)		16’-6” (5.03 m)
21’-0” (6.4 m)		16’-8” (95.08 m)

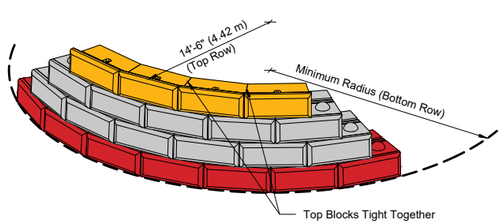

Concave curves may be installed at varying radii. The blocks should be placed tight together to make a smooth curve. Although there is no fixed minimum radius, smaller radii lengths of less than 14'6" (4.42 m) will result in exposing more of the untextured top face of the blocks in the underlying layer.

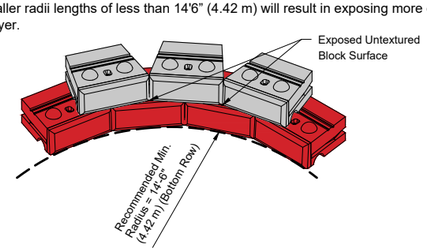

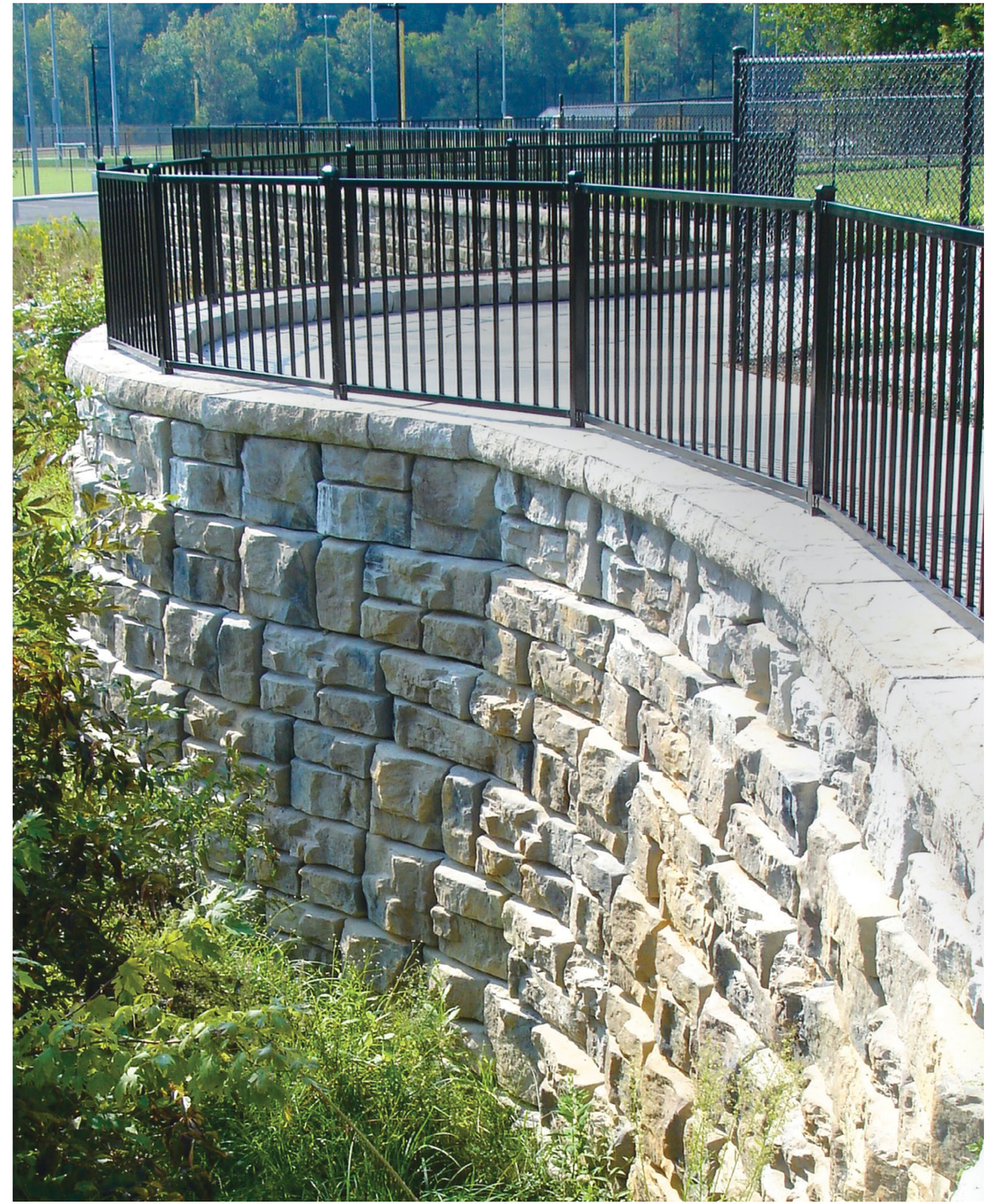

Positive Connection (PC) Design Guide

Redi-Rock publishes a great resource created especially for engineers who are considering, designing, or reviewing a mechanically stabilized earth wall utilizing the Redi-Rock PC System. Inside the PC System Design Guide you will find an overview of the system, sample projects, components, MSEW inputs, and an example problem. This 30 page document is available for immediate download at **redi-rock.com**.

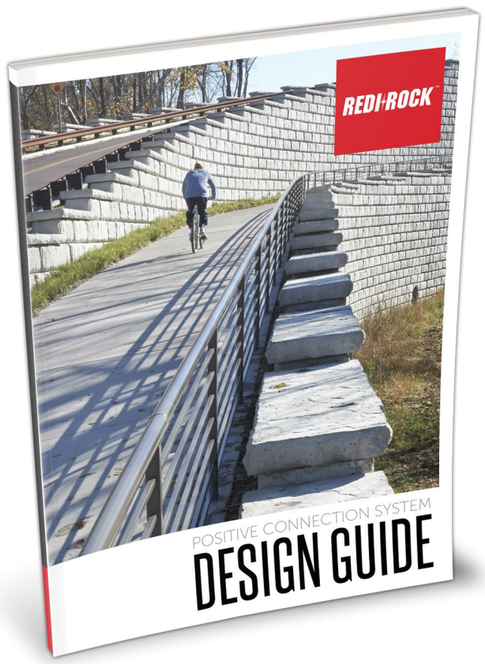

IN THE PC DESIGN GUIDE, YOU'LL FIND:

- System overview
- Case Studies
- Description of system components
- Recommended connection design parameters
- Recommended MSEW input parameters
- Example problem

Redi-Rock Wall Freeware & Professional

THE software tools to optimize your Redi-Rock designs

As a retaining wall engineer, you don't want to be kept up at night wondering about a wall failure. The Redi-Rock system comes with two robust design software packages to provide the peace of mind you need.

Developed by FINE Software, the geotechnical experts that developed the full suite of GEO5 programs, both versions of Redi-Rock Wall provide an amazing amount of control over every aspect of your design, allowing you to optimize your wall from top to bottom.

REDI-ROCK WALL FREEWARE

- Design and analyze gravity walls
- Bearing capacity and slope stability modules
- ASD or LRFD calculation capacity
- 3D visualization

Thousands of engineers download the freeware every year. Get your copy today at **redi-rock.com/freeware**.

REDI-ROCK WALL PROFESSIONAL

- Design and analyze gravity walls and MSE walls using Positive Connection (PC) blocks
- Includes full GEO5 Settlement, Slope Stability, and Spread Footing modules
- ASD or LRFD calculation capacity
- 3D visualization

Upgrade to Redi-Rock Wall Professional to take your designs to new heights. Lease, buy, or demo the software at **redi-rock.com/pro**.

redi-rock.com